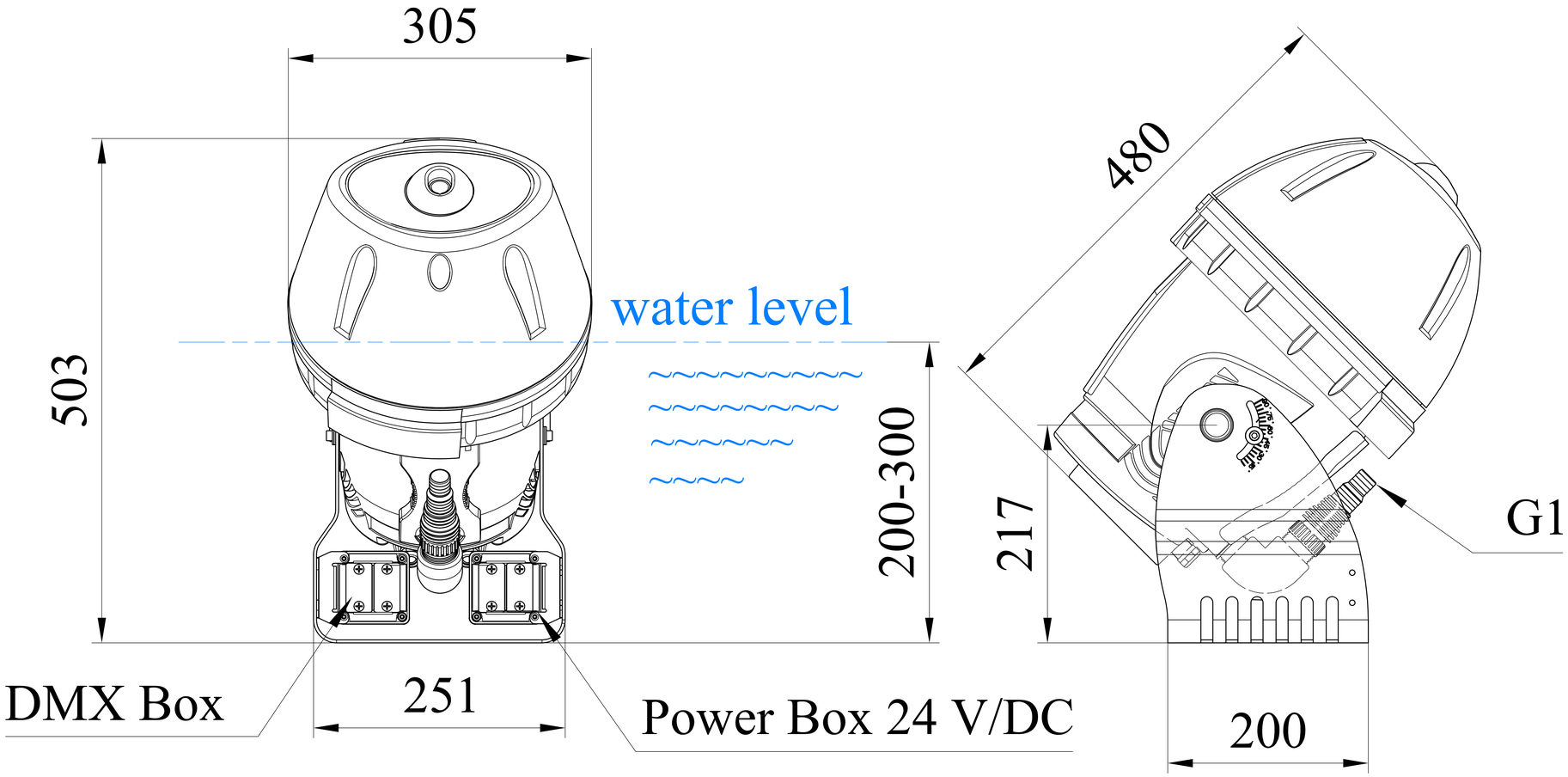
305
503
water level
200-300
DMX Box
251
Power Box 24 V/DC
480
217
G1
200

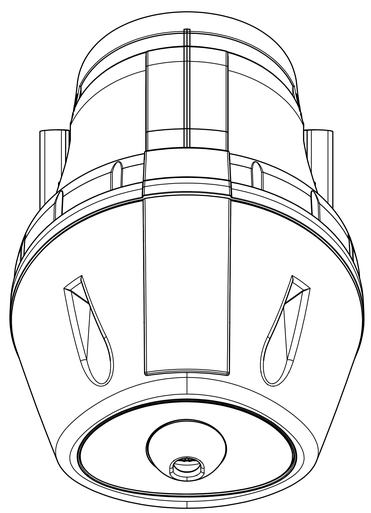

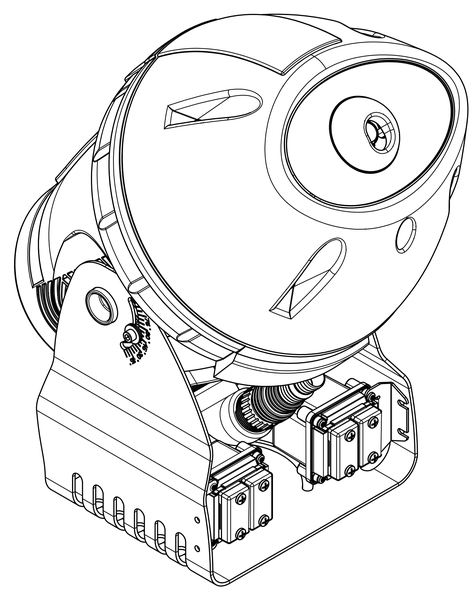

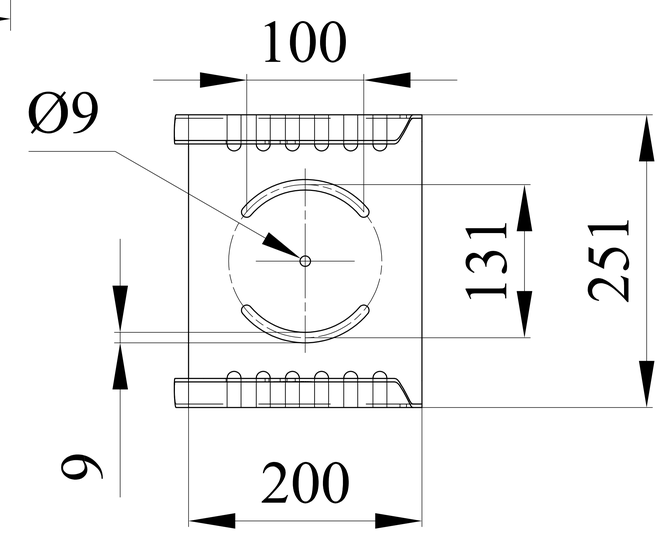
100
Ø9
131
251
9
200