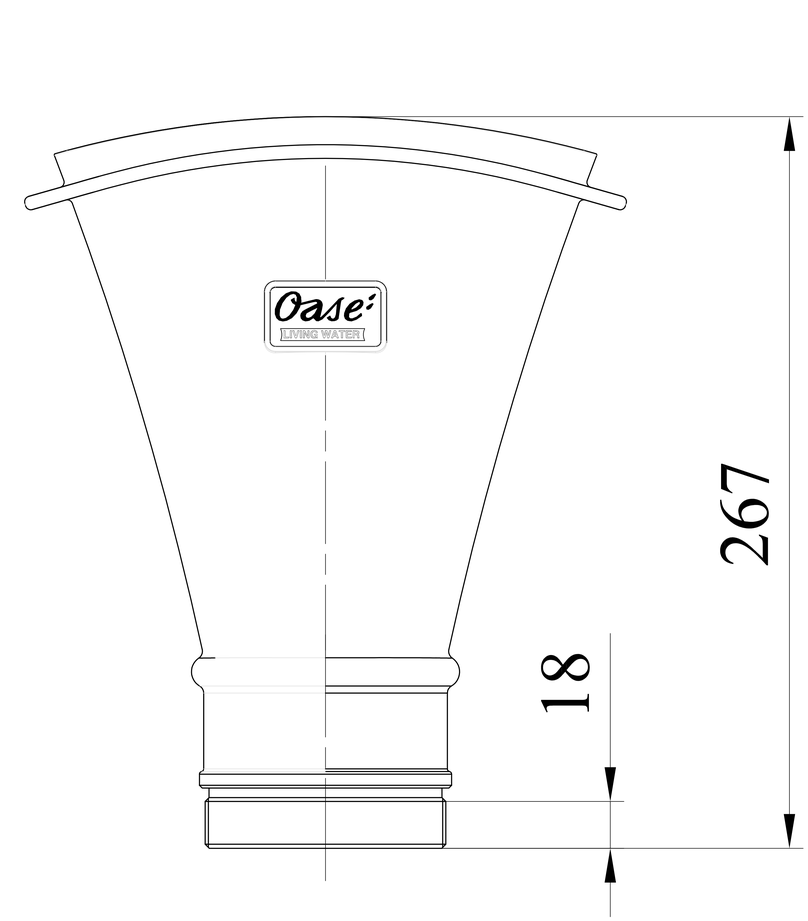
Oase
LIVING WATER
267
18

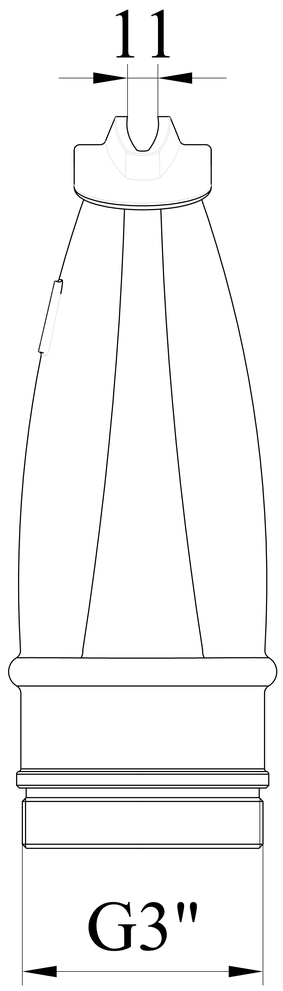
11
G3"

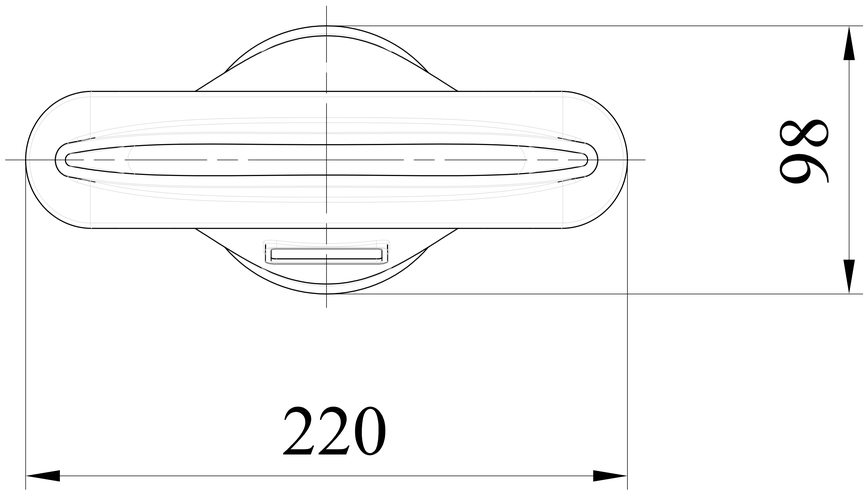
98
220