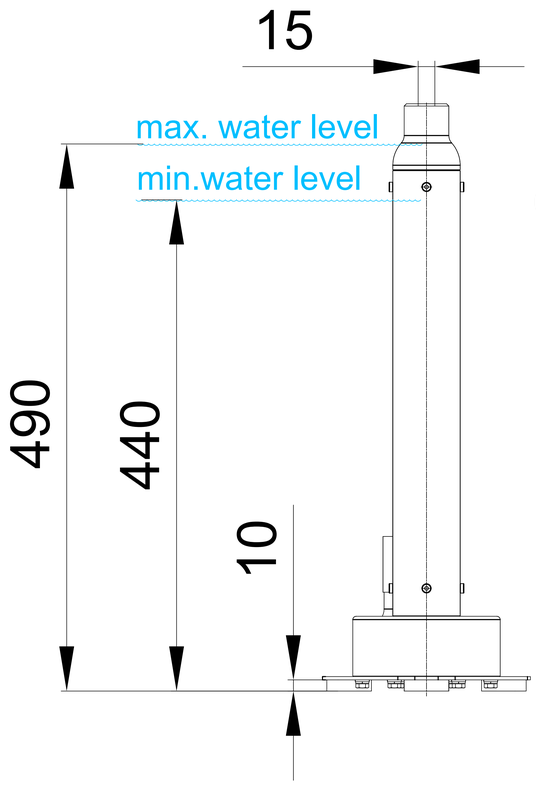
15
max. water level
min.water level
490
440
10

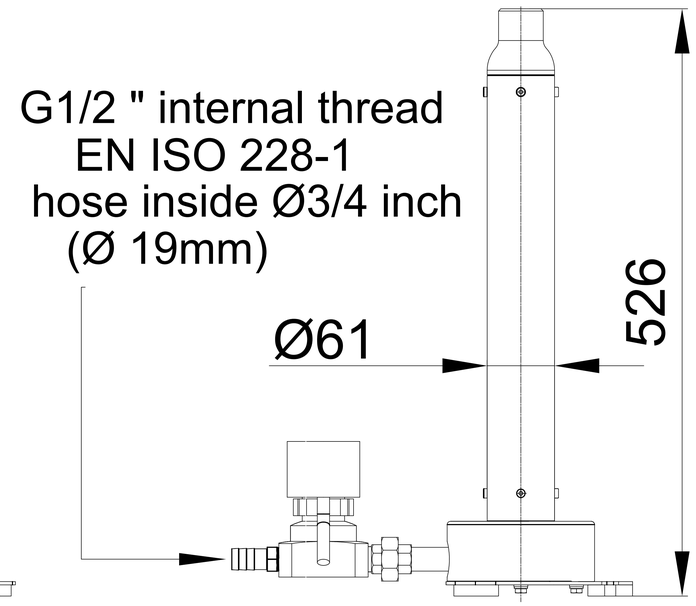
G1/2 " internal thread
EN ISO 228-1
hose inside Ø3/4 inch
(Ø 19mm)
Ø61
526

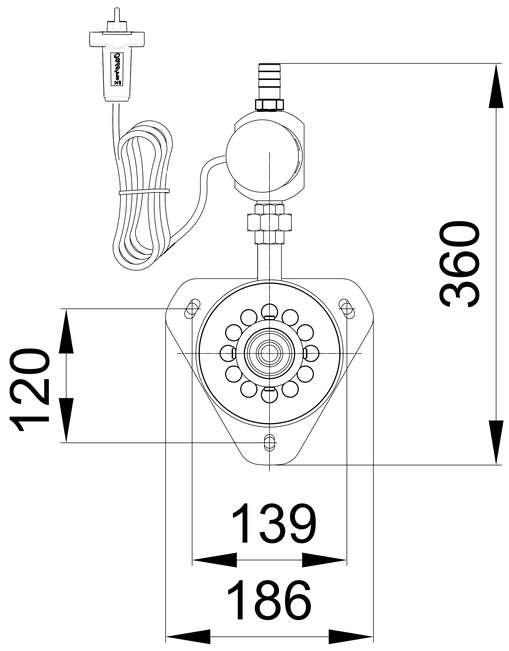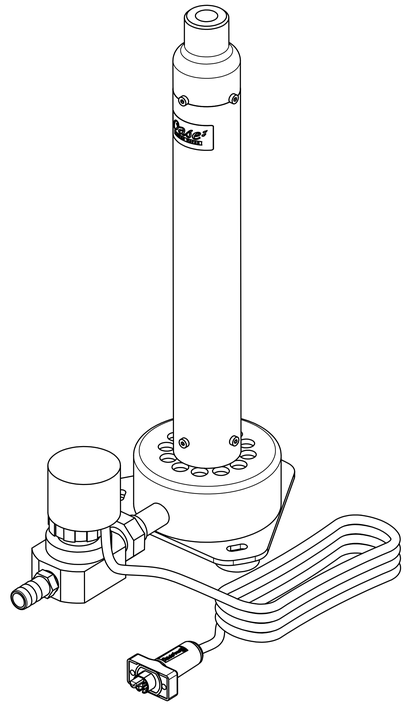
360
120
139
186